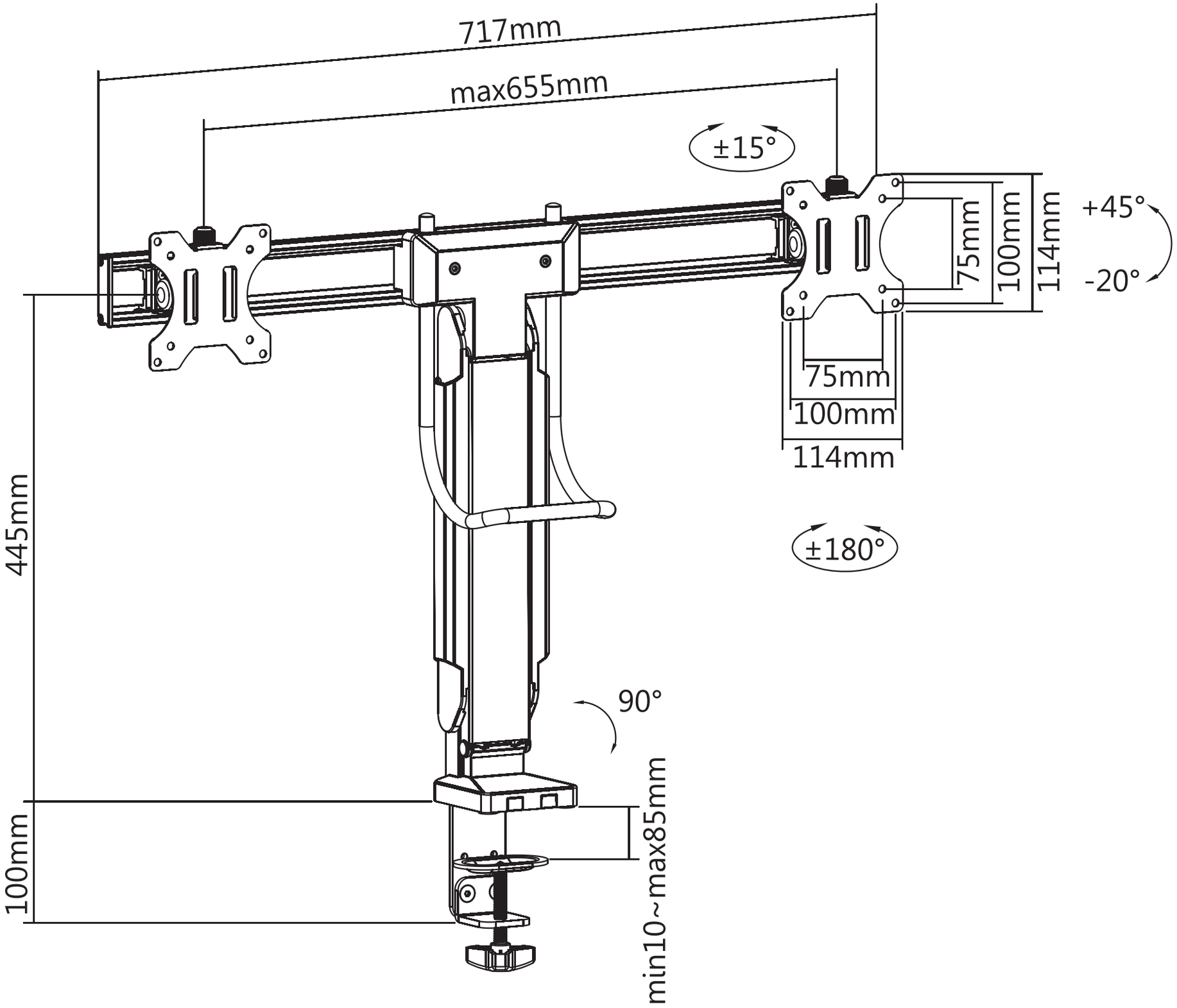
717mm
max655mm
±15°
+45°
-20°
75mm
100mm
114mm
75mm
100mm
114mm
±180°
445mm
90°
100mm
min10~max85mm